TRANSFORMER & CIRCUIT BREAKER LEAK REPAIR

TRANSMISSION & DISTRIBUTION SERVICES

LEAK SEAL SPECIALISTS

Transmission & Distribution Services

Building and Maintaining a Professional Relationship with our Customers

Procedure Review

At TDS we respect our customer and his equipment. Prior to making any repairs, TDS management meets with the customer's engineering staff and maintenance supervisors to review all basic repair procedures, company policy, and warranty follow-up. Procedures are explained in detail allowing the customer to observe exactly how the repair will be accomplished. **Reference lists and sealant tests are provided to all customers.**

Sample Work

We ask our customers to provide us with some leak concerns so that we can field demonstrate our repair methods. "Walking the walk" provides first-hand evidence of the capability and knowledge of our technicians as well as the skill and success of our repair methods. This sample work allows the customer to physically observe leak sealing in action. TDS management and technical personnel will address all technical considerations. This work is performed at no risk to the customer. **If TDS doesn't fix the leak, the customer doesn't pay.**

Surveys

TDS representatives, technicians, and management all do customer-equipment surveys. These surveys list the following: the location of the substation or facility; the exact piece of equipment; the location of the leak; the price of the repair; and the repair method to be used. Surveys are provided to the customer on an Excel spreadsheet and all additional costs such as travel, per diem, and hotel charges are estimated for the job. Surveys form the contractual basis for a specific job. When TDS technicians do the job, they list each repair on a *daily work log*. All *daily work logs* are provided to the customer with the invoice for the work. These documents correlate directly to the original survey and establish the warranty for each individual repair. **Surveys are done at no charge to the customer.**

Ongoing Work

The first procedure that a TDS technician performs is to confirm the exact location of the leak. During the survey it is often difficult to determine which component has failed. Leak detection removes the doubt. Our policy is to fix only what is leaking.

The day-in and day-out competence and professionalism of our technicians are the heart of TDS. Our personnel work exclusively in substations and are extremely knowledgeable about leak sealing on transformers and circuit breakers. **TDS is the only company in the world that specializes in substation leak sealing.**

Our goal is to be your leak-sealing company of choice. **Our commitment is to maintain your trust and confidence through superior performance and service.**

Common TDS Leak Seal Solutions

Oil Leak Detection


Figure 1.a


Figure 2


Figure 3

Figure 1.b

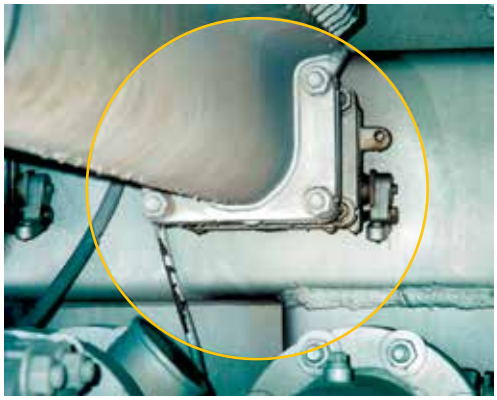

An important first-step in repairing transformer oil leaks is leak detection. **Figures 1.a and 1.b** show a 4-bolt flapper valve that is leaking. However, it is difficult to determine what component has failed by visual observation. It could be the flange gasket, the stem, or both areas. TDS personnel thoroughly clean the entire valve assembly and spray on ***TDS Oil Leak Detector***. **Figure 2** shows the valve assembly after the oil leak detector has been sprayed onto the suspect components. **Figure 3** shows how the oil has reappeared. Oil has darkened the oil leak detector at the split line between the flanges and around the stem packing area. Therefore, it is apparent that both the flange gasket and stem packing area are leaking. TDS technicians are now able to concentrate their repair efforts on actual leaks.

4-Bolt Flapper Valve Flange Gasket Repair


Figure 1


Figure 2


Figure 3

Flange gasket failure on 4-bolt flapper valves is a frequent transformer leak problem (**Figure 1**). Once the gasket fails, even additional bolt tightening will rarely stop the leak. To repair the gasket normally, the radiator bank must be drained and removed. Many utility maintenance personnel also drain the oil from the main tank because often the flapper valves cannot be trusted to hold the oil in the main tank. Usually all gaskets are replaced while the radiator is removed. The transformer is out of service during this costly repair method. The TDS repair procedure is done without draining the oil and can be accomplished while the transformer is energized on all flanges below the lid. To repair the failed gasket, TDS drills and taps 4 holes into the gasket groove at the 12, 3, 6, and 9 o'clock positions. Injection valves are threaded into the holes. Sealant is then pumped into the failed gasket area using low-pressure hydraulic techniques (**Figure 2**). The sealant flows into all the failed areas, thereby fixing the leak. Pipe plugs are threaded into the tapped holes after the sealant has cured (**Figure 3**). Usually a 4-bolt flange can be repaired in two hours.

8-Bolt Butterfly Valve Flange Gasket Repair

Figure 1

Figure 2

Figure 3

Many larger transformers have 8-bolt butterfly valves to control the oil flow between the radiator and the main tank. Often there are 8-bolt flanges on the pump assemblies. Gasket fatigue invariably leads to leaks (**Figure 1**). Like 4-bolt flapper valve failure, to repair the 8-bolt flange gasket, normally the radiator bank must be drained and the bank removed and all gaskets replaced on the connecting flanges and valves. Since 8-bolt butterfly valves are associated with large service transformers, downtime for a traditional repair is very expensive. Again, like the 4-bolt flange repair, TDS repairs the leak without draining the oil. This repair can be accomplished while the transformer is energized on all flanges below the lid. To repair the failed gasket, TDS drills and taps eight holes into the gasket groove around the circumference of the flange. (*TDS drills this number of holes so the technician can visually insure that the sealant is tracking in the groove.*) Injection valves are threaded into the holes. Sealant is then pumped into the failed gasket area using low-pressure hydraulic techniques (**Figure 2**). The sealant flows into all the failed areas, which thereby stops the leak. Pipe plugs are threaded in the tapped holes after the sealant has cured (**Figure 3**). Usually an 8-bolt flange can be repaired in three hours.

Valve Stem Repair

Figure 1

Figure 2

Figure 3

A common transformer leak is the failed packing on 4-bolt flapper and 8-bolt butterfly valve stems (**Figure 1**). Once the packing deteriorates, compression cannot be sustained by continuing to tighten the packing nut so leaks develop. To repair the packing traditionally, the old packing has to be replaced. Since the valve stem is usually on the transformer side of the valve, care must be taken not to spill oil during the repair process. This entails draining the oil from the main tank or pulling a vacuum; both are time consuming and expensive procedures. TDS drills and taps a hole into the failed packing area allowing for the temporary installation of an injection valve (**Figure 2**). TDS sealant is then injected into the packing area with a hydraulic gun. The sealant flows into the packing area until the void is filled and the leak is stopped. TDS sealant is nonadhering and rubber based, which makes it malleable and oil resistant. The valve is fully operational after the repair is complete (**Figure 3**).

Drain Plug Repair

Figure 1

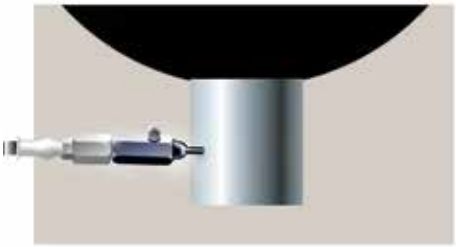

Figure 2

Figure 3

Drain plugs are found at numerous locations on a transformer. The most common location is on the bottom of radiator headers. If additional tightening does not stop these common thread leaks (**Figure 1**), the plug has to be removed and repaired. This entails draining the oil from the radiator bank or compartment. Again, this results in oil processing and downtime for the transformer.

The repair procedure that TDS uses is to enclose the leaking plug with a specially-designed aluminum enclosure (**Figure 2**). TDS technicians inventory various sized enclosures to fit the most common drain plugs. The enclosure is held in place by two set screws and crunch teeth that are located on the inside diameter of the enclosure's bore. Once installed, the enclosure's void is pumped with TDS rubber-based nonadhering sealant which stops the leak (**Figure 3**). As long as the customer wants the leak stopped, the enclosure remains in place. If the customer wants to access the plug, the enclosure can be easily removed. The set screws are loosened and the enclosure tapped off with a rubber mallet. A mold of sealant will be left that can be removed quickly with a razor knife since the sealant is nonadhering.

CT Junction Block Repair

Figure 1

Figure 2

Figure 3

The two junction blocks in **Figure 1** are leaking between the J-Block and the compartment wall. In order to repair these leaks, TDS technicians will take precise measurements of the J-Block area in order to design two clamps that will fully enclose the leak. The clamp seen in **Figure 2** is a two-piece PVC design. Built into the clamp are two grooves for gaskets. The first gasket will seal against the compartment wall.

The second gasket will seal just outside the wire bundle diameter on the block itself. To install the clamp it is necessary to use stud extenders on the block's four existing studs. Once the two pieces of the clamp are installed over the stud extenders, two cross bolts and nuts are tightened to bring the two pieces together. The nuts are then tightened on the stud extensions seating both gaskets. The clamp is then pumped with TDS nonadhering sealant (**Figure 3**) and repairs the leak. An outage is required for this repair. Since a traditional repair would necessitate draining the oil from the main tank, the TDS method results in great savings for the utility. Both clamps can be removed easily, if necessary, by unbolting and cutting away the nonadhering sealant. The normal repair time for this procedure is six to eight hours.

Dresser Coupling Repair


Figure 1


Figure 2

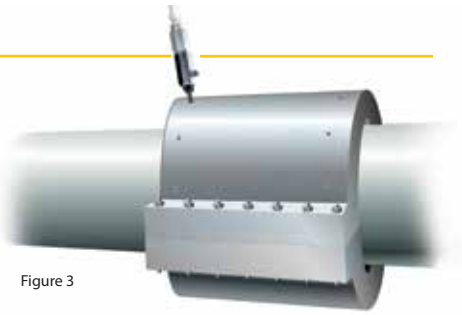
Figure 3

Dresser coupling pipe connections (**Figure 1**) are found on many large transformers. If additional tightening does not fix the leak, oil must be drained from the system in order to replace the worn gaskets. The repair method TDS uses does not require any draining of oil, and the repair can be made while the transformer is energized. TDS has standard clamp designs for the typical dresser couplings founds on transformers. The two-piece clamp is fitted around the dresser and bolted together (**Figure 2**). Note the two gasket seals on the inside diameter of the clamp. These gaskets fit securely around the diameter of the pipe to prevent sealant leakage during injection. **Figure 3** shows the clamp being injected with sealant, which repairs the leak. The clamp remains in place after the repair is completed. Estimated time for this repair is four to eight hours.

SF 6 Gas Leak on a Circuit Breaker's Porcelain to Flange Gasket Connection Repair

Figure 1

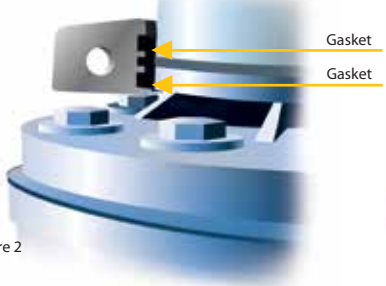

Figure 2

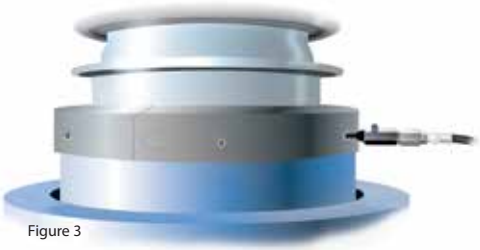
Figure 3

SF 6 gas is expensive and has been designated a "greenhouse" gas by the EPA. Therefore, it is important for electrical utilities to control SF 6 leaks. The traditional repair for a bushing gasket failure is to disassemble the bushing and replace the gasket. Unfortunately, this is an expensive method since the circuit breaker is not operational while the repair is being made. The disassembly and reassembly costs also add to the expense. TDS uses an extremely cost-effective method for repairing these leaks. In **Figure 1**, a SF 6 gas leak has been detected at the gasket that seals the porcelain to flange connection. This leak can be detected by using one of the following methods: an infrared laser device, ultrasonic detection, a gas leak halogen meter, or a common soap solution. TDS technicians take precise measurements of the porcelain and flange outside diameters as well as vertical distances around the leaking area. These measurements are used to design either an aluminum or PVC two-piece clamp that will enclose the leaking area.
Figure 2 shows a profile of half the clamp installed. *Note the rubber gasket seals at the top and bottom of leaking area.* These gaskets fit tightly against the bushing and the flange in order to isolate the leak and to prevent sealant leakage during sealant injection. The central channel adjacent to the leaking area is where the sealant will be injected.

Figure 3 shows the clamp fully installed and sealant being injected into the clamp. TDS uses a rubber-based nonadhering sealant that typically cures in 20 minutes at 70 degrees F. After the sealant cures, the leak is repaired. The clamp stays in place for as long as the utility wants the leak stopped. If for some reason the bushing requires disassembly, the clamp can be removed easily by unbolting it and cutting away the sealant. No damage is done to the circuit breaker in contrast to epoxy repairs. This method drastically reduces circuit breaker downtime, and the cost savings are significant since no disassembly and reassembly are required. This repair can be accomplished in approximately four hours.

Gas Insulated Substations (GIS) SF 6 Leaks

TDS has had a vast amount of experience in repairing SF 6 gas leaks on GIS Systems. TDS recommends that the electrical utility company employ the services of a leak detection service company that uses an **infrared laser detection device**. This resulting leak-detection survey and video record provides an extremely accurate quantification and precise location of all SF 6 leaks. In cooperation with the utility, TDS technicians can recommend specific repair methods for each identified leak. There are numerous components that have the potential for leakage. Piping, flange connections, and seam welds are typical trouble spots. Addressing the leaks individually using TDS techniques can result in large cost savings for the utility. Usually the savings that result from the combination of no disassembly, reassembly and nonoperational time will soon pay for the cost of the TDS repairs. **Call TDS for a thorough evaluation of your GIS concerns**.

TDS is experienced and proven in repairing SF 6 gas leaks on Gas Insulated Substations.

TDS-installed clamp on a Gas Insulated Substation.

TDS Products

Transformer Cleaner

Oil stained and dirty transformers are targets for environmental inspections and sanctions. ***TDS Transformer Cleaner*** is an industrial strength cleaning solution that will have your equipment looking like new. It can be used full strength on heavy soil or diluted to 5 to 1 for medium soil or 10 to 1 for light soil. It is the ideal solution for pressure washing. ***TDS Transformer Cleaner is 100% Biodegradeable and Water Soluble so it can be used without any harm to the environment.*** Transformer Cleaner is sold by the case. Each case contains six 1-gallon containers.

Oil Leak Detector

Use ***TDS Oil Leak Detector*** to determine the exact component that is leaking. Spray a light coating of the detector on the leaking component. The leak will turn the powder dark indicating the specific gasket or packing that has failed. Oil Leak Detector is especially useful in finding pinhole or small weld seam cracks on transformers. Oil Leak Detector is sold by the box. Each box has twelve 7-ounce spray cans.

Repair Caulk

This product is specially formulated to tackle weld and seam leaks where there is an active leak. To repair small pinhole or cracks in welded seams, first use ***TDS Transformer Cleaner*** to thoroughly clean the leaking area. Then use ***TDS Oil Leak Detector*** to locate the exact source of the leak. Peen some material into the leaking area to temporarily stop the leak. Then apply ***TDS Repair Caulk*** over the leaking area to stop the leak. Repair Caulk is fast acting (cures in 5 minutes) and has superior adhering qualities. It is available in boxes of twelve 6-inch sticks.

To order, call 775-586-8300. TDS accepts MasterCard and VISA.

TDS provides transformer and circuit breaker leak seal solutions around the world. Their proven experience and commitment to excellent customer service has made them the leak-sealing company of choice in the power industry.

Call TDS today for more information on their cost effective leak seal solutions.

phone | 775.586.8300
fax | 775.586.1105
address | 28369 Davis Parkway, Suite 401, Warrenville, IL 60555
website | tdsleakseal.com

TDS representatives, technicians, and management only work in substations and are extremely knowledgeable about leak sealing on transformers and circuit breakers.

TRANSMISSION & DISTRIBUTION SERVICES

LEAK SEAL SPECIALISTS

Printed in the U.S.A. Copyright 2016, Transmission & Distribution Services, LLC